Conductivity Converter UNICON-LF

Characteristics

The Conductivity Converter UNICON-LF has been designed for the measurement of conductivity, as a degree of the purity or concentration of a liquid. In connection with 4-electrode-conductivity cells a high accuracy and insensitivity of contamination can be achieved. A further advantage is a broad range of application with only one cell. Only for measurement in ultra-pure water a special 2-electrode conductivity cell must be used.

Technical data

Power supply	
Loop voltage	: U_B 14..30 V DC, 2-wire connection
Operating temperature	: 0..50 °C
CE-conformity	: EN 61326-1:2013
Conductivity output	
Current	: 4..20 mA
Unit	: programmable µS/cm; mS/cm; kΩ/cm; MΩ/cm
Decimals	: 0..3 digit (unit depending)
Indicating range	: 500..9999 Digit (unit and decimals depending)
min./max. MR	: 0..5.00 µS/cm bis 0..500.0 mS/cm; 0..0.500 µS/cm / 0..50.0 µS/cm with ultra-pure cell
Temperature comp.	: non linear for ultra pure water and natural water or linear programmable from 0.000..8.000 %/°C
-Cell constant	: 0.080..9.999
-Accuracy	: ±0.5 % of the measuring value, ±2 Digit
Temperature output	
Current	: 4..20 mA
Burden	: RA ≤ (U_B-14 V) ÷ 0.02 A
Temperature sensor	: RTD Pt100 or Pt1000 acc. to DIN IEC 751
Unit	: °C, °F programmable
Measuring range	: -40.0..+160.0 °C
Alarm outputs	
Transistor	: 14..30 V DC, max. 60 mA
Voltage drop	: < 2V
MR switch over	
R_i	: >10 kΩ
MB1 active	: U = 0..3 V DC
MB2 active	: U = 12..30 V DC
Display	: LCD-dot matrix, 3.8mm characters
Range	: 2 lines 16 characters each
Case	: head case / field case
Material	: case polyamide with fiber glass PA6-GF/GK 15/15, front foil polyester
Dimensions	: 100 x 100 x 60 mm (WxHxD)
Weight	: max. 360 g
Connection	: screw terminal with pressure plate, 2.5 mm² flexible wire, 4 mm² single wire and plug-in cable for sensor
Protection class	: IP65, terminals IP20 acc. to BGV A3

Dimensions

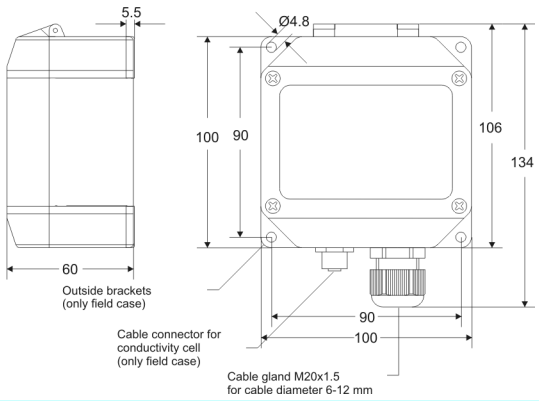

Connection diagram

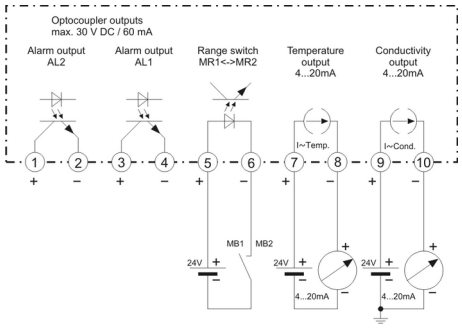

Ordering code

	1.		2.		3.		4.		5.
UNICON-LF -	☐	-	☐	-	☐	-	☐	-	☐

1.	**Model**	
	1	output 4..20 mA for conductivity 2 electronic alarm outputs
	2	as 1, but 2nd measuring range for conductivity, output 4..20 mA for temperature
2.	**Mounting**	
	01	head mounting, on the cell
	02	field mounting, separate connection cable page Error: Reference source not found
	03	as 02, but plug stainless steel
3.	**Measuring principle**	
	4	4-electrode measurement (2-electrode cell connectable)
4.	**Temperature compensation**	
	1	RTD Pt100
	3	RTD Pt1000
5.	**Options**	
	00	without option
	14	measurement/monitoring acc. to USP<645>

Accessories see page Error: Reference source not found
Connection diagrams see page Error: Reference source not found

PRC Technologies Corp., Ltd. ลาดพร้าว 101 กรุงเทพ 10240
โทรศัพท์ : 02 530 1714, 02 932 1711 มือถือ : 086 360 8600
อีเมล : contact@prctech.net LINE ID1 : prctec-info, LINE ID2 : @prctec